LEDX.NO

LED expert AS
Torpumveien 543
1788 Halden

E-post: post@ledx.no
Tlf: 909 54 606

Parameter

WATTAGE	200/240/300/400/480W
LIGHT SOURCE	LUMILEDS
DRIVER	MEANWELL
LAMP LUMINOUS FLUX	150LM/W±5%
CRI	Ra>70/80
CCT	2700-6500K
RATED VOLTAGE	AC 100-240V 277V~,50/60Hz
POWER FACTOR	>0.95
BEAM ANGLE	60°/120°(100/150/200/240W) 30°/60°/90°/120°(300/400/480W)
IP GRADE	IP65
HEAT-SINK	ALUMINIUM COOLING FIN ALUMINIUM RIVET
OPERATING TEMP	-40℃~60℃

200W
30,000LM±5%
5.3kg±5%
384PCS LED
429×429×159mm

240W
36,000LM±5%
5.3kg±5%
480PCS LED
429×429×159mm

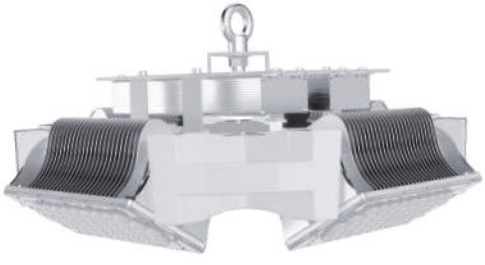

300W
45,000LM±5%
7.1kg±5%
112PCS LED
429×429×225mm

400W
60,000LM±5%
7.4kg±5%
144PCS LED
429×429×225mm

480W
72,000LM±5%
7.4kg±5%
192PCS LED
429×429×225mm

Professional Light Distribution

Multiple optical lens choices are available with angles including 30°/60°/90°/120° to meet the requirements for professional light distribution and an extensive scope of applications.

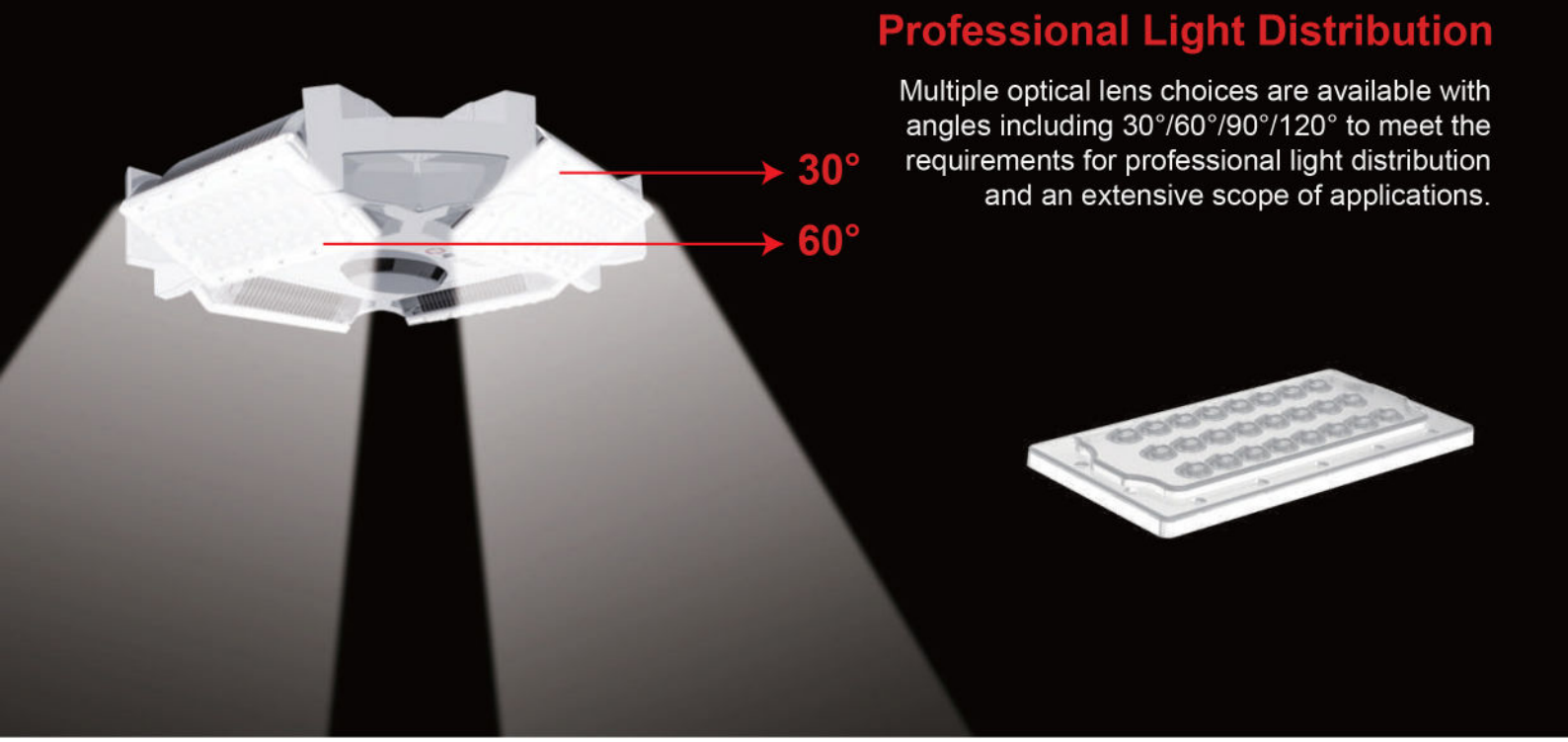

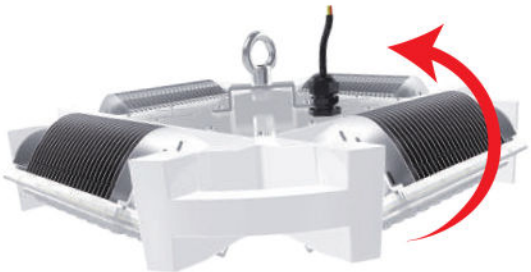

- **Ultralight**
- **Module Rotatable 200°**
- **High Luminous Flux**
- **Installation & Maintenance Friendly**

Build-In sensor

- Microwave Sensor
- Microwave Sensor Dimming
- Dimming Remote Control Microwave Sensor

Original Design Heat-Sink

Aluminium Rivet

Aluminium Cooling Fin

Aluminium Cooling Fin

Light Distribution Curve

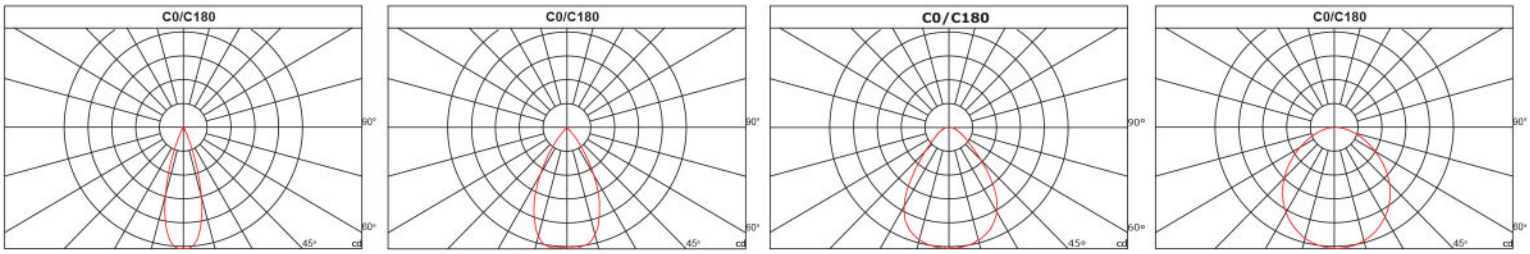

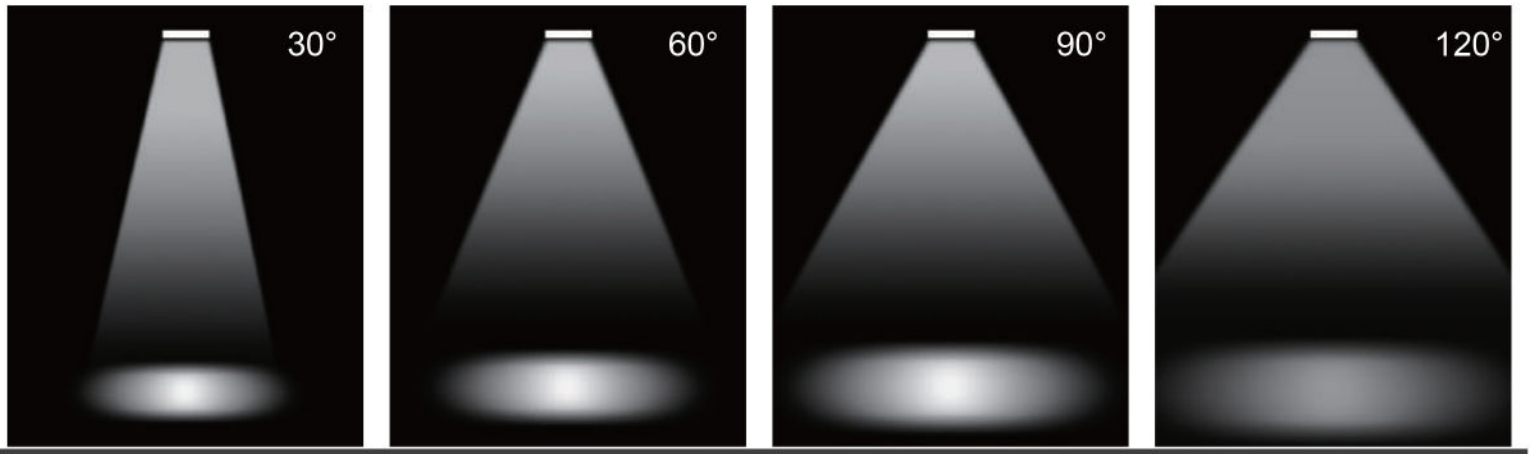

Size
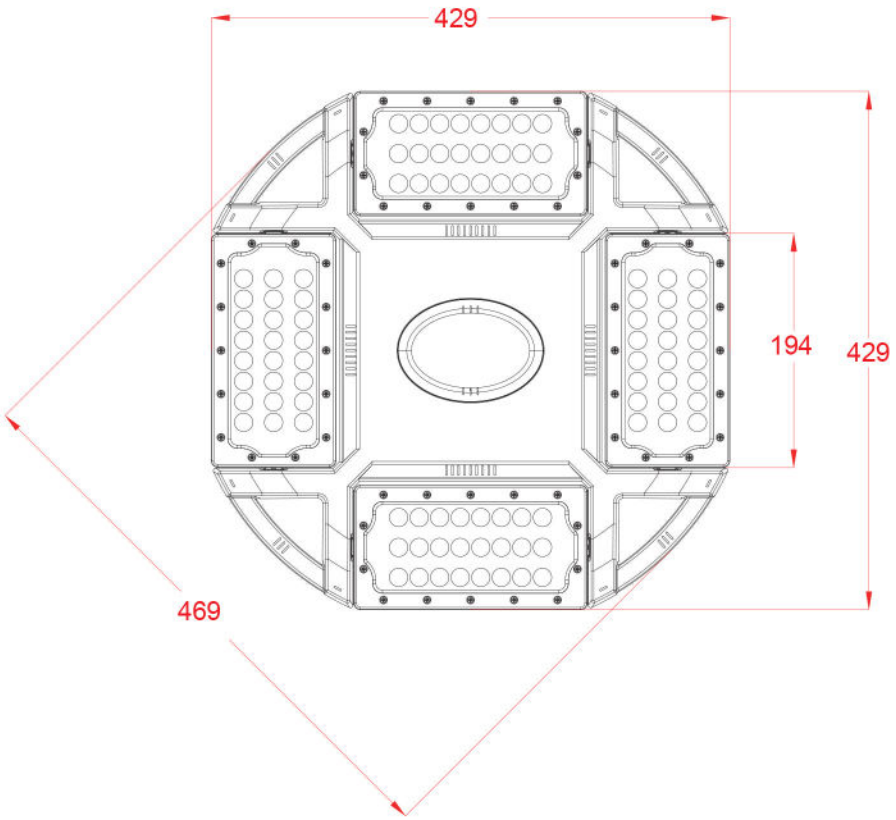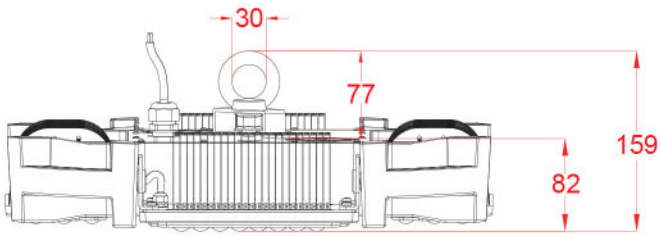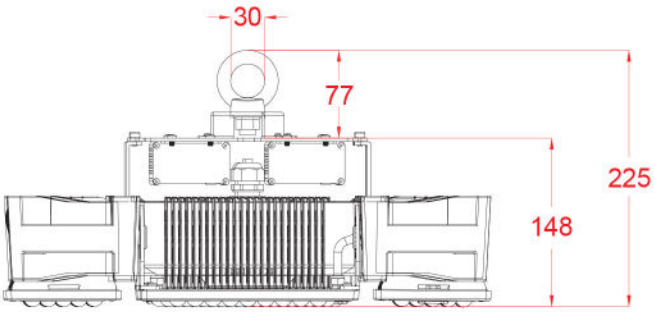
(mm)